WRC83002.WB1
ASSEMBLY INSTRUCTION

P1 Headboard (x 1pc)

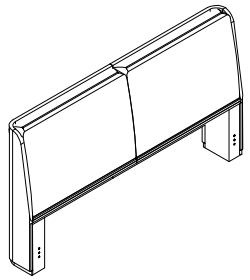

P2 Footboard (x 1pc)

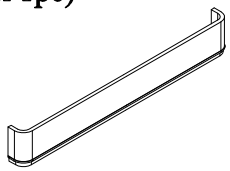

P3 Side Rail (x 1set)

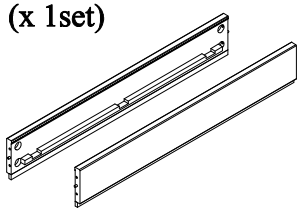

P4 Slat (x 3pcs)

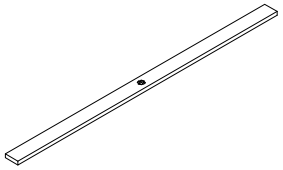

P5 Center leg (x 3pcs)



01 Steel threaded bar (x 8pcs)

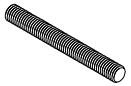

02 Half moon washer (x 8pcs)



03 Hexagonal nut & washer (x 8pcs)



04 Steel open wrench (x 1pc)

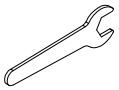

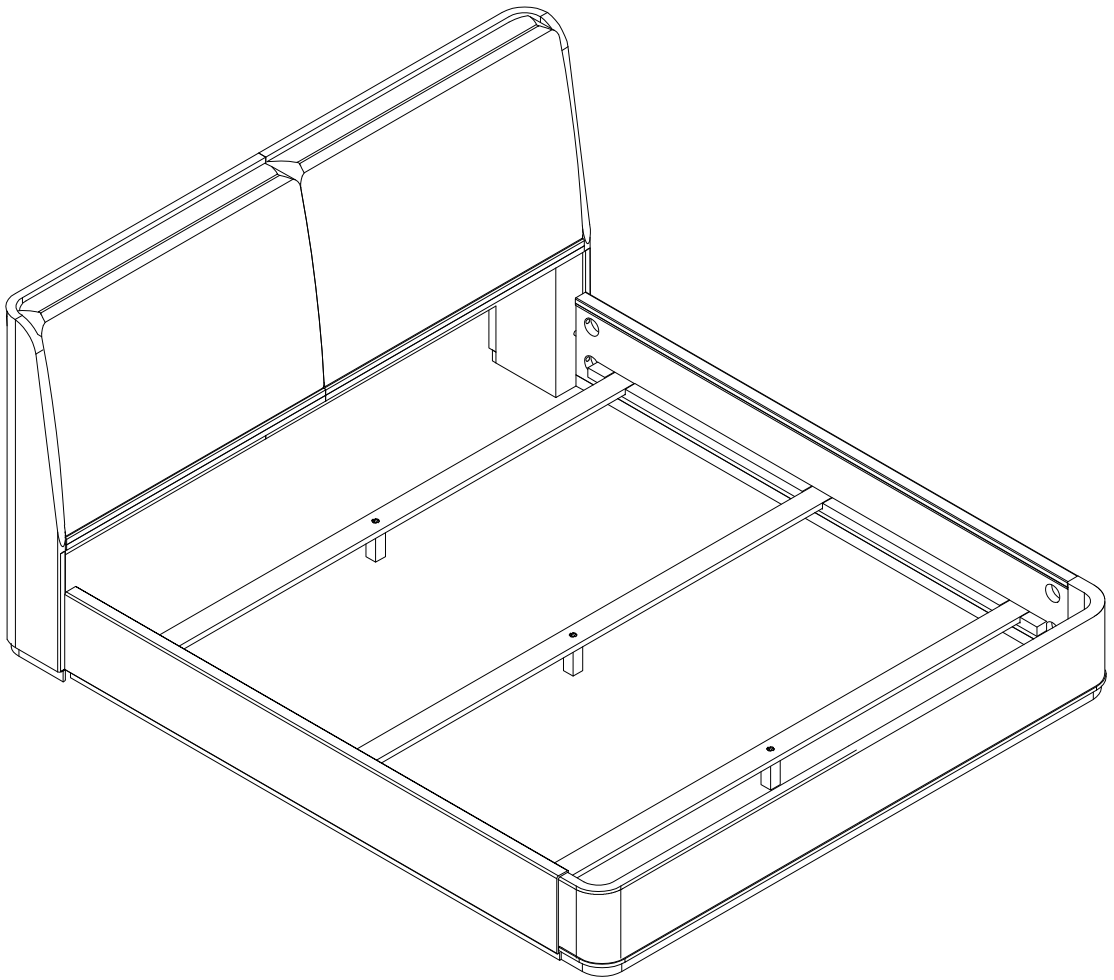

WRC83002.WB1
ASSEMBLY INSTRUCTION

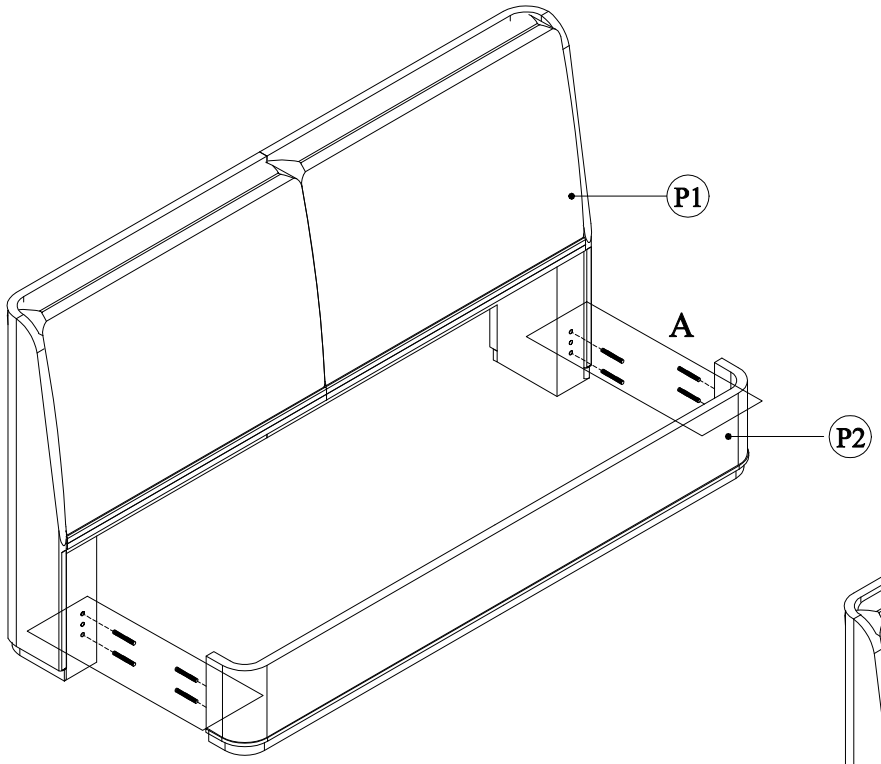

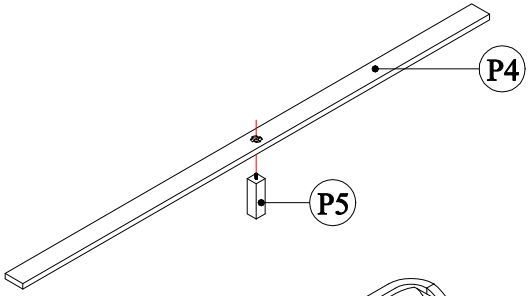

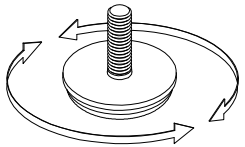

Detail 'C'

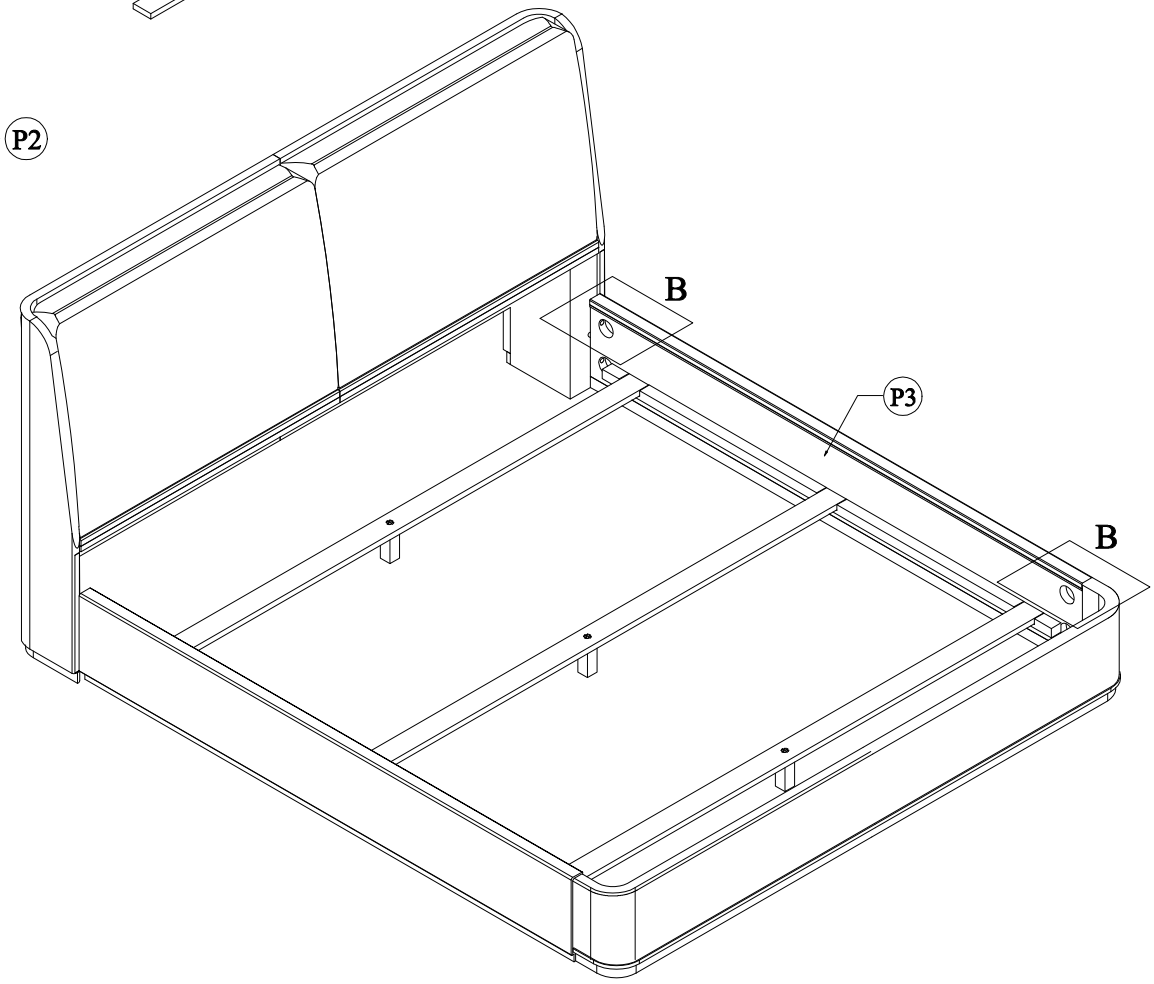

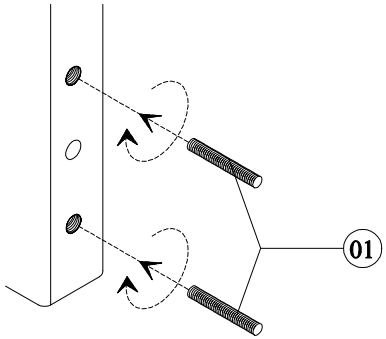

Detail 'A'

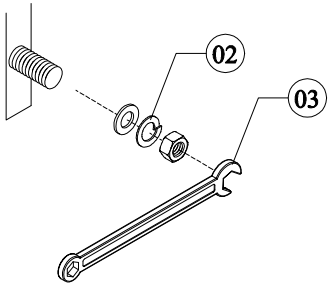

Detail 'B'