TA83073
ASSEMBLY INSTRUCTION

P1 Headboard 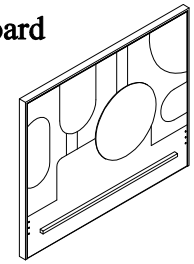 x 1	01 Steel threaded bar 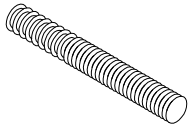 x 8	02 Hexagonal nut & lock washer  x 8	03 Steel open wrench 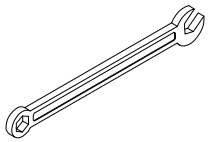 x 1	04 Half moon washer (x 8)  x 8

P2 Footboard 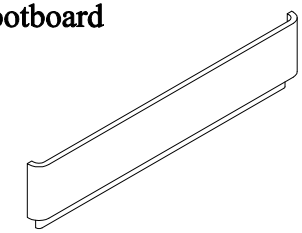 x 1

P3 Side Rail 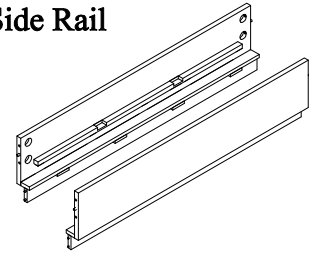 x 1Set

P4 Support 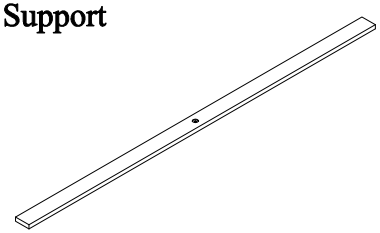 x 2

P5 Center support  x 2

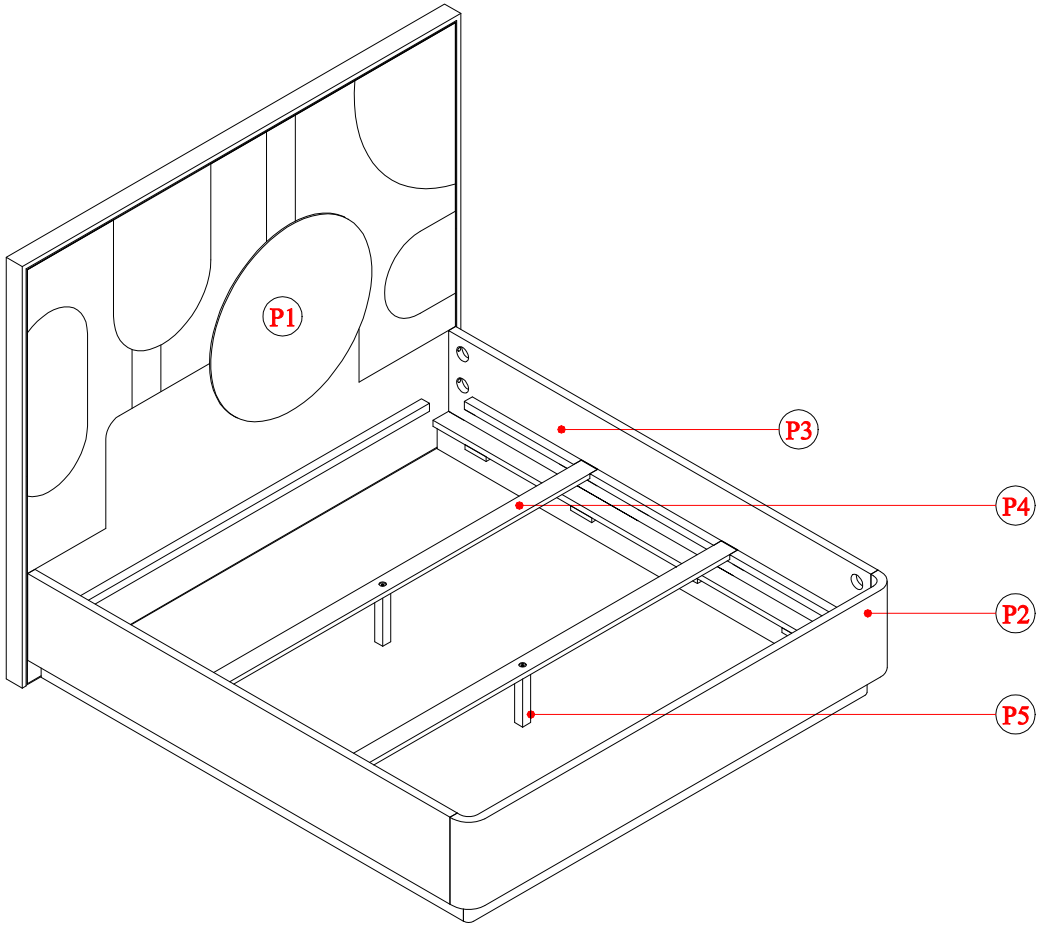

TA83073
ASSEMBLY INSTRUCTION

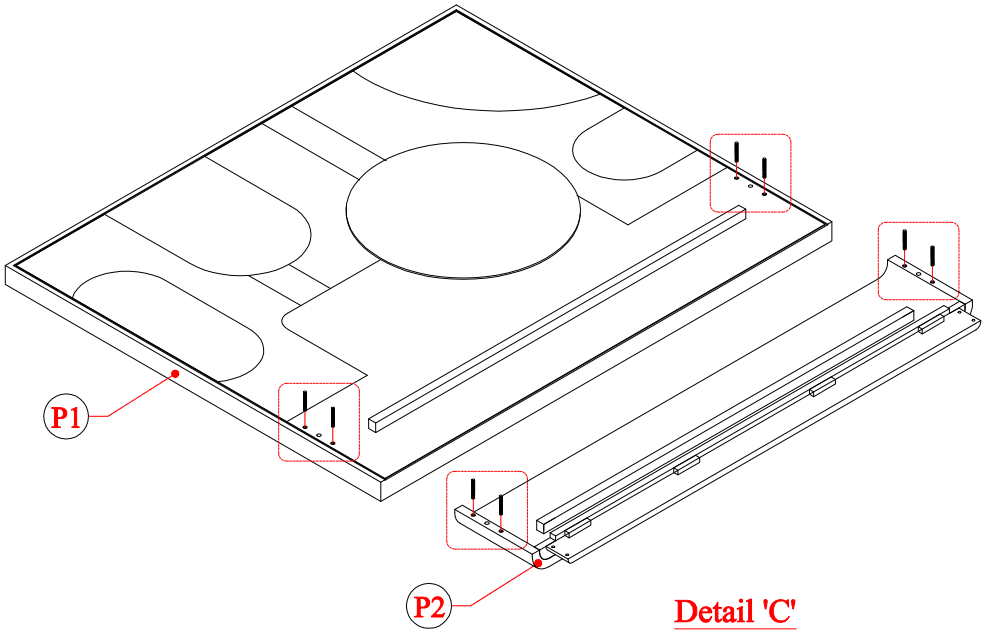

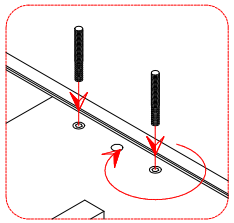

Detail 'A'

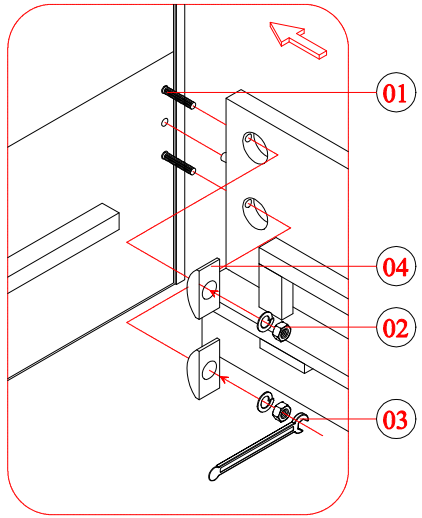

Detail 'B'

Detail 'C'

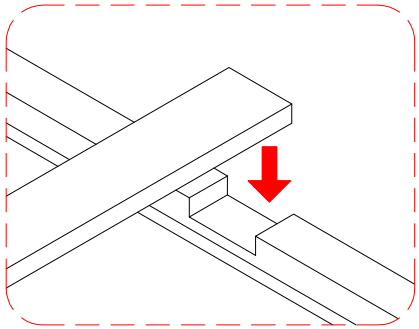

Detail 'D, E'

